# TCB50W Series Metric Washer

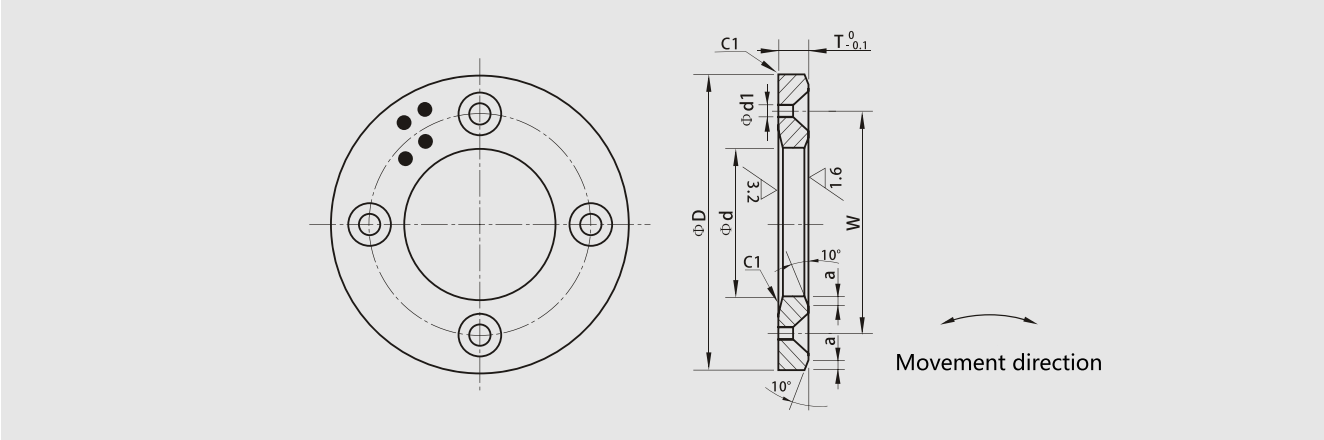


| Designation | Ø d +0.2 +0.1 | Ø D | T 0 -0.1 | Bolt | | | | chamfering |
|---|---|---|---|---|---|---|---|---|
| | | | | W | Crop bolt | Bore number | Ø d | |
| TCB50 □ W 1003 | 10.2 | 30 | 3 | 20 | M3 | 2 | 3.5 | 1.5 |
| TCB50 □ W 10A03 | | | | — | — | — | — | — |
| TCB50 □ W 1203 | 12.2 | 40 | | 28 | M3 | 2 | 3.5 | 2 |
| TCB50 □ W 12A03 | | | | — | — | — | — | — |
| TCB50 □ W 1303 | 13.2 | 50 | | 28 | M3 | 2 | 3.5 | 2 |
| TCB50 □ W 1403 | 14.2 | | | 28 | | | | |
| TCB50 □ W 1503 | 15.2 | | | 35 | | | | |
| TCB50 □ W 1603 | 16.2 | | | 35 | | | | |
| TCB50 □ W 16A03 | | | | — | — | — | — | — |
| TCB50 □ W 1803 | 18.2 | | | 35 | M3 | 2 | 3.5 | 2 |
| TCB50 □ W 20005 | 20.2 | | 5 | 35 | M5 | | 6 | 2.5 |
| TCB50 □ W 20A05 | | | | — | — | — | — | — |
| TCB50 □ W 2505 | 25.2 | 55 | | 40 | M5 | — | — | — |
| TCB50 □ W 25A05 | | | | — | — | — | — | — |
| TCB50 □ W 3005 | 30.2 | 60 | | 45 | M5 | | 6 | 2.5 |
| TCB50 □ W 3505 | 35.2 | 70 | | 50 | M6 | 2 | — | |
| TCB50 □ W 4007 | 40.2 | 80 | 7 | 60 | | | 7 | 3 |
| TCB50 □ W 4507 | 45.2 | 90 | | 70 | | | | |
| TCB50 □ W 5008 | 50.3 | 100 | 8 | 75 | | 4 | | 4 |
| TCB50 □ W 5508 | 55.3 | 110 | | 85 | | | | |
| TCB50 □ W 6008 | 60.3 | 120 | | 90 | M8 | | 9 | 5 |
| TCB50 □ W 6508 | 65.3 | 125 | | 95 | | | | |
| TCB50 □ W 7010 | 70.3 | 130 | 10 | 100 | | | | |
| TCB50 □ W 7510 | 75.3 | 140 | | 110 | | | | |
| TCB50 □ W 8010 | 80.3 | 150 | | 120 | | | | |
| TCB50 □ W 9010 | 90.5 | 170 | | 140 | M10 | | 11 | |
| TCB50 □ W 10010 | 100.5 | 190 | | 160 | | | | |
| TCB50 □ W 12010 | 120.5 | 200 | | 175 | | | | |