# TCB50SF Series Normal Metric Flange Bearing

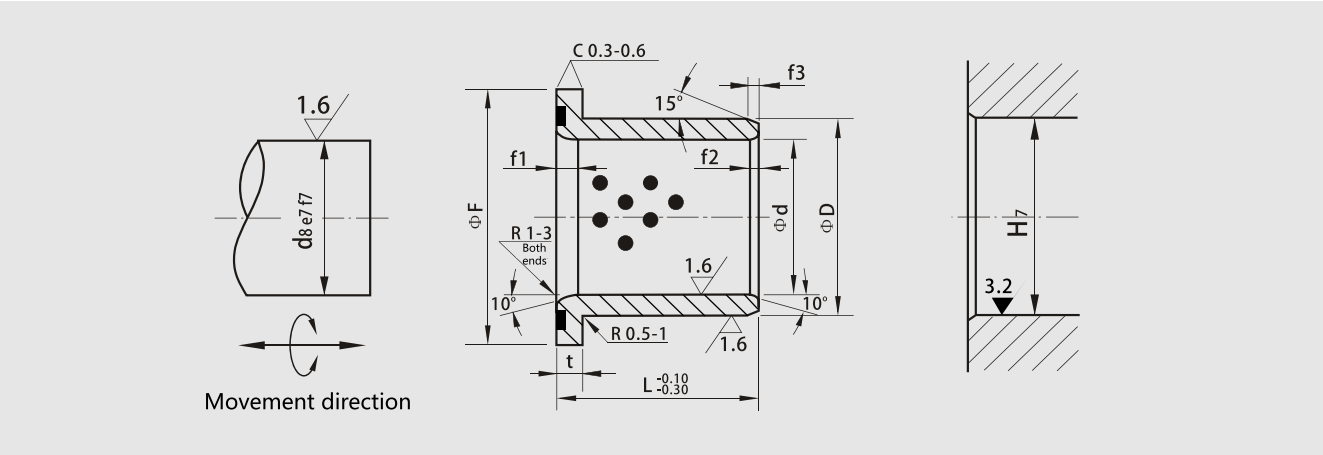


| Designation | Shaft Dia. Heavy Load d8 | Shaft Dia. Low Load e7 | Shaft Dia. high-precision f7 | Housing Bore H7 | L -0.1 -0.3 | I.D. Ø d E7 | O.D. Ø D r6 | Flange F | Flange t | f1 | f2 | f3 |
|---|---|---|---|---|---|---|---|---|---|---|---|---|
| TCB50 □ SF 121811 | 12 -0.050 -0.077 | 12 -0.032 -0.050 | 12 -0.016 -0.034 | 18 +0.018 0 | 11 | 12 +0.050 +0.032 | 18 +0.034 +0.023 | 30 | 3 0 -0.10 | 2 | 2 | 1 |
| TCB50 □ SF 121823 | | | | | 23 | | | | | | | |
| TCB50 □ SF 152113 | 15 -0.050 -0.077 | 15 -0.032 -0.050 | 15 -0.016 -0.034 | 21 +0.021 0 | 13 | 15 +0.050 +0.032 | 21 +0.041 +0.028 | 35 | | | | |
| TCB50 □ SF 162213 | 16 -0.050 -0.077 | 16 -0.032 -0.050 | 16 -0.016 -0.034 | 22 +0.021 0 | 13 | 16 +0.050 +0.032 | 22 +0.041 +0.028 | | | | | |
| TCB50 □ SF 162218 | | | | | 18 | | | | | | | |
| TCB50 □ SF 182418 | 18 -0.050 -0.077 | 18 -0.032 -0.050 | 18 -0.016 -0.034 | 24 +0.021 0 | 18 | 18 +0.050 +0.032 | 24 +0.041 +0.028 | 40 | | | | |
| TCB50 □ SF 202820 | 20 -0.065 -0.098 | 20 -0.040 -0.061 | 20 -0.020 -0.041 | 28 +0.021 0 | 20 | 20 +0.050 +0.032 | 28 +0.041 +0.028 | 45 | 5 0 -0.10 | 3 | 2 | |
| TCB50 □ SF 202825 | | | | | 25 | | | | | | | |
| TCB50 □ SF 253320 | 25 -0.065 -0.098 | 25 -0.040 -0.061 | 25 -0.020 -0.041 | 33 +0.025 0 | 20 | 25 +0.061 +0.040 | 33 +0.050 +0.034 | 50 | | | | 2 |
| TCB50 □ SF 253325 | | | | | 25 | | | | | | | |
| TCB50 □ SF 303825 | 30 -0.065 -0.098 | 30 -0.040 -0.061 | 30 -0.020 -0.041 | 38 +0.025 0 | 25 | 30 +0.061 +0.040 | 38 +0.050 +0.034 | 55 | | | | |
| TCB50 □ SF 303835 | | | | | 35 | | | | | | | |
| TCB50 □ SF 354425 | 35 -0.085 -0.119 | 35 -0.050 -0.075 | 35 -0.025 -0.050 | 44 +0.025 0 | 25 | 35 +0.075 +0.050 | 44 +0.050 +0.034 | 65 | | | | |
| TCB50 □ SF 354435 | | | | | 35 | | | | | | | |
| TCB50 □ SF 405027 | 40 -0.080 -0.119 | 40 -0.050 -0.075 | 40 -0.025 -0.050 | 50 +0.025 0 | 27 | 40 +0.075 +0.050 | 50 +0.050 +0.034 | 70 | 7 0 -0.10 | | | |
| TCB50 □ SF 405037 | | | | | 37 | | | | | | | |
| TCB50 □ SF 405047 | | | | | 47 | | | | | | | |
| TCB50 □ SF 506238 | 50 -0.080 -0.119 | 50 -0.050 -0.075 | 50 -0.025 -0.050 | 62 +0.030 0 | 38 | 50 +0.075 +0.050 | 62 +0.060 +0.041 | 90 | 8 0 -0.10 | 4 | 3 | 3 |
| TCB50 □ SF 506248 | | | | | 48 | | | | | | | |
| TCB50 □ SF 506258 | | | | | 58 | | | | | | | |
| TCB50 □ SF 607438 | 60 -0.100 -0.146 | 60 -0.060 -0.090 | 60 -0.030 -0.060 | 74 +0.030 0 | 38 | 60 +0.090 +0.060 | 74 +0.062 +0.043 | 110 | | | | |
| TCB50 □ SF 607468 | | | | | 68 | | | | | | | |
| TCB50 □ SF 708550 | 70 -0.100 -0.146 | 70 -0.060 -0.090 | 70 -0.030 -0.060 | 85 +0.035 0 | 50 | 70 +0.090 +0.060 | 85 +0.073 +0.051 | 120 | 10 0 -0.10 | | | |
| TCB50 □ SF 708580 | | | | | 80 | | | | | | | |
| TCB50 □ SF 809660 | 80 -0.100 -0.146 | 80 -0.060 -0.090 | 80 -0.030 -0.060 | 96 +0.035 0 | 60 | 80 +0.090 +0.060 | 96 +0.073 +0.051 | 140 | | 5 | 4 | 4 |
| TCB50 □ SF 809690 | | | | | 90 | | | | | | | |